Cambridge International AS & A Level

**Cambridge International Examinations**
Cambridge International Advanced Subsidiary and Advanced Level

CANDIDATE NAME

CENTRE NUMBER

CANDIDATE NUMBER

*3620168062*

**PHYSICS** **9702/32**

Paper 3 Advanced Practical Skills 2 **May/June 2016**

**2 hours**

Candidates answer on the Question Paper.

Additional Materials: As listed in the Confidential Instructions.

**READ THESE INSTRUCTIONS FIRST**

Write your Centre number, candidate number and name on all the work you hand in.
Write in dark blue or black pen.
You may use an HB pencil for any diagrams or graphs.
Do not use staples, paper clips, glue or correction fluid.
DO **NOT** WRITE IN ANY BARCODES.

Answer **both** questions.
You will be allowed to work with the apparatus for a maximum of one hour for each question.
You are expected to record all your observations as soon as these observations are made, and to plan the presentation of the records so that it is not necessary to make a fair copy of them.
You are reminded of the need for good English and clear presentation in your answers.

Electronic calculators may be used.
You may lose marks if you do not show your working or if you do not use appropriate units.

Additional answer paper and graph paper should be used only if it becomes necessary to do so.

At the end of the examination, fasten all your work securely together.
The number of marks is given in brackets [ ] at the end of each question or part question.

| For Examiner's Use | |
|---|---|
| 1 | |
| 2 | |
| Total | |

This document consists of **12** printed pages.

DC (ST/SG) 109588/3
© UCLES 2016

CAMBRIDGE International Examinations

[Turn over

**You may not need to use all of the materials provided.**

**1** In this experiment, you will investigate the motion of a suspended card shape.

**(a)** Set up the apparatus as shown in Fig. 1.1.
Suspend the card from the pin held in the split cork. Ensure that the pin is parallel to the bench. Suspend the plumb-line from the pin.

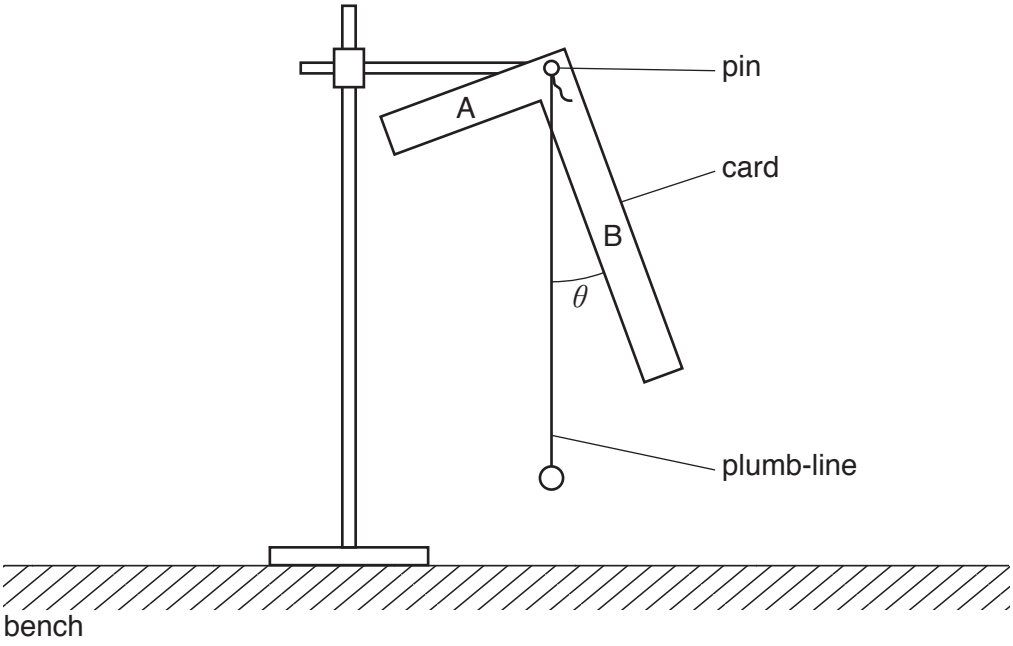


**Fig. 1.1**

**(b)** **(i)** Measure and record the angle $\theta$ between the edge of arm B and the plumb-line, as shown in Fig. 1.1.

$\theta$ = ..... [1]

**(ii)** Remove the plumb-line from the pin.

**(iii)** Displace arm B approximately 2 cm to one side and release it so that the card oscillates.

**(iv)** Take measurements to find the period $T$ of the oscillations.
Record $T$.

$T$ = ..... s [2]

**(c) (i)** Decrease the length of arm B by cutting approximately 3 cm off its end.

**(ii)** Replace the plumb-line and repeat **(b)**.

$\theta$ = .....

$T$ = ..... s

**(d)** Continue to decrease the length of arm B.
For each length of arm B, repeat **(b)** until you have six sets of values for $\theta$ and $T$.

You may include your values from **(b)** and **(c)**.

Include values for $\frac{1}{\sqrt{\tan\theta}}$ in your table.

[9]

**(e)** **(i)** Plot a graph of $T$ on the $y$-axis against $\frac{1}{\sqrt{\tan\theta}}$ on the $x$-axis. [3]

**(ii)** Draw the straight line of best fit. [1]

**(iii)** Determine the gradient and $y$-intercept of this line.

gradient = .....

$y$-intercept = .....

[2]

© UCLES 2016

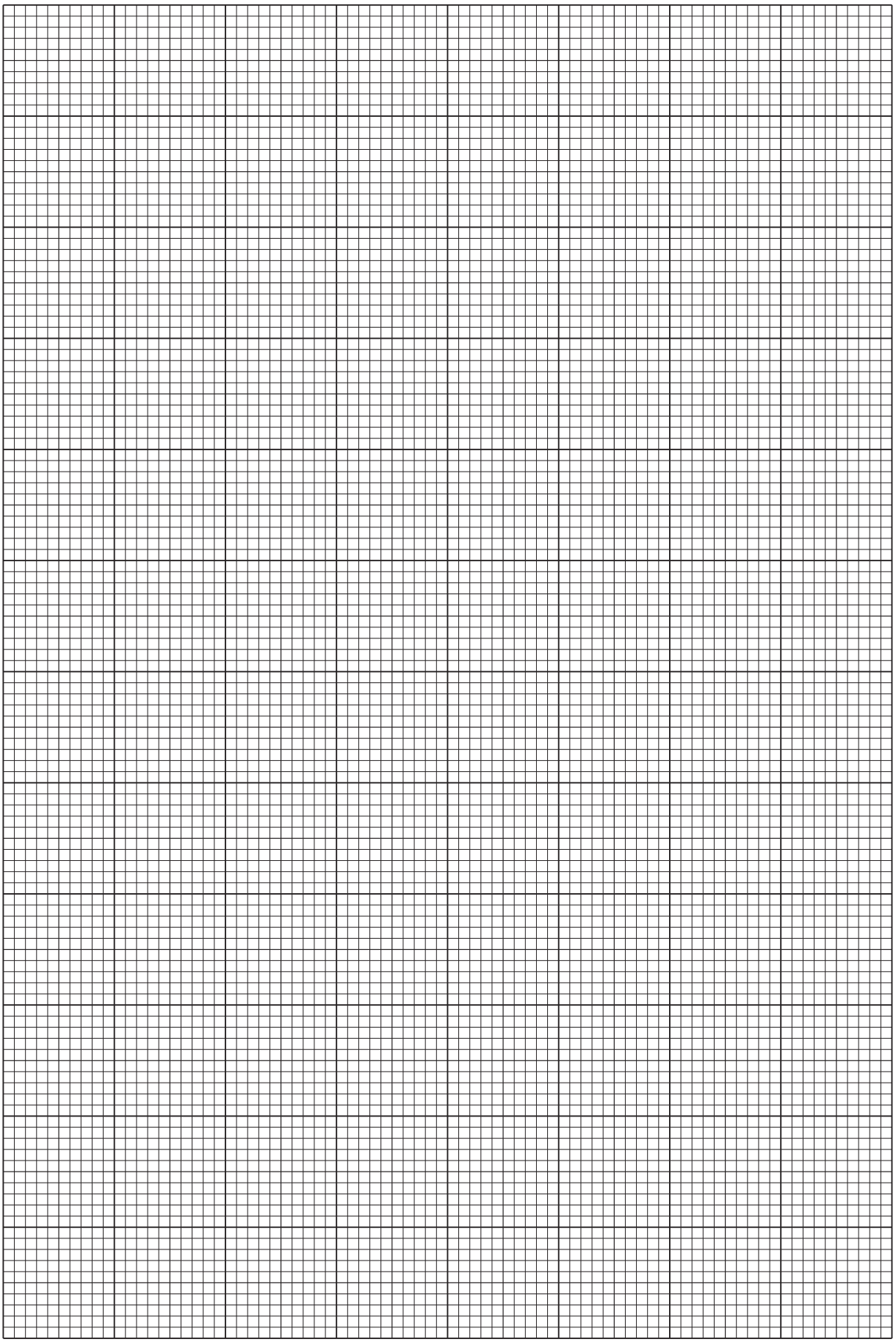

**(f)** The quantities $T$ and $\theta$ are related by the equation

$$T = \frac{p}{\sqrt{\tan\theta}} + q$$

where $p$ and $q$ are constants.

Use your answers from **(e)(iii)** to determine the values of $p$ and $q$.
Give appropriate units.

$p$ = .....

$q$ = .....

[2]

[Total: 20]

**Please turn over for Question 2.**

**You may not need to use all of the materials provided.**

**2** In this experiment, you will investigate the force exerted by a flow of water.

You are provided with two plastic water bottles labelled A and B, each with a hole in the base.

**(a) (i)** Measure and record the distance *h* between the two lines marked on bottle A, as shown in Fig. 2.1.

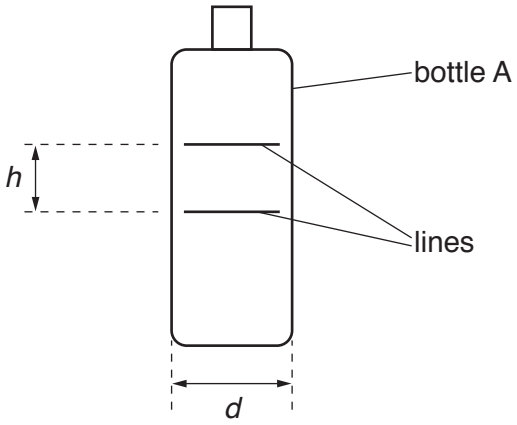


**Fig. 2.1**

*h* = ..... cm [1]

**(ii)** Measure and record the diameter *d* of the bottle, as shown in Fig. 2.1.

*d* = ..... cm [1]

**(b)** Estimate the percentage uncertainty in your value of *d*.

percentage uncertainty = ..... [1]

© UCLES 2016

**(c) (i)** With the unused stand, clamp the bottle securely by its neck above the tray, as shown in Fig. 2.2. The base of the bottle should be approximately 20 cm above the bench.

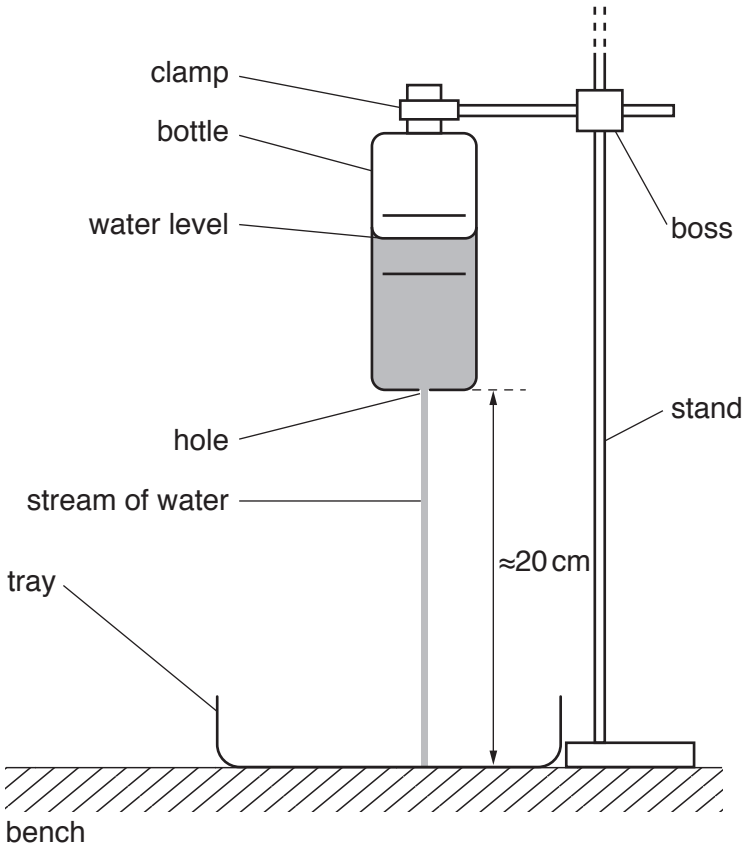


**Fig. 2.2**

Fill the bottle with water.
As the water flows through the hole into the tray, measure and record the time *t* for the water level to fall from the upper line to the lower line.

*t* = ..... [2]

**(ii)** Calculate the flow rate $R$ of the water using

$$R = \frac{\pi d^2 h}{4t}.$$

$R$ = ..... [1]

**(iii)** When the water stops flowing, empty the water from the tray into one of the jugs provided.

**(d) (i)** Refill the bottle with water and position the stand holding the wooden strip so that the stream of water falls on the end of the strip, as shown in Fig. 2.3.

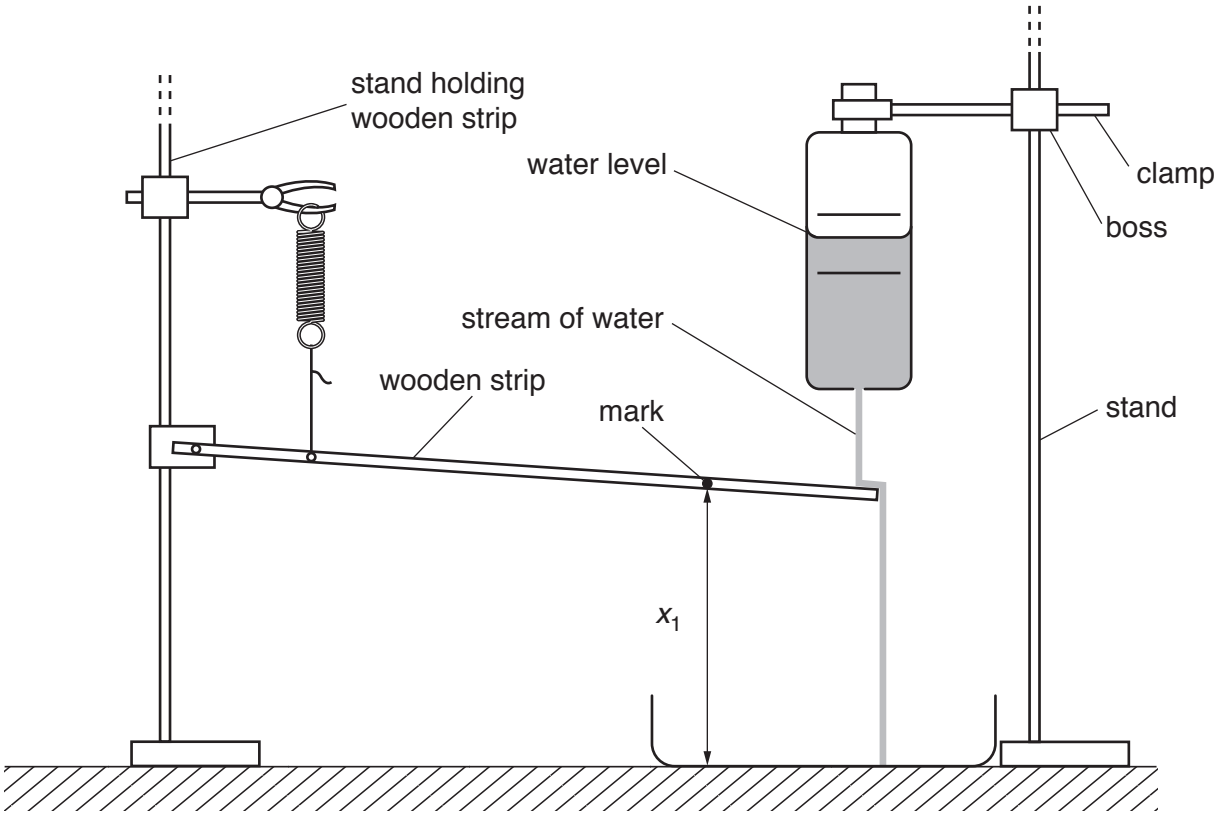


**Fig. 2.3**

**(ii)** When the water level is between the two lines on the bottle, measure and record the height $x_1$ above the tray of the mark on the wooden strip, as shown in Fig. 2.3.

$x_1$ = ..... [1]

**(iii)** Move the bottle so that the stream of water is missing the wooden strip, and measure and record the height $x_2$ above the tray of the mark on the wooden strip.

$x_2$ = .....

**(iv)** When the water stops flowing, empty the water from the tray into one of the jugs provided.

© UCLES 2016

**(e)** Repeat **(a)**, **(c)** and **(d)** using bottle B.

$h$ = ..... cm

$d$ = ..... cm

$t$ = .....

$R$ = .....

$x_1$ = .....

$x_2$ = .....

[3]

**(f)** It is suggested that the relationship between $x_1$, $x_2$ and $R$ is

$$x_2 - x_1 = kR$$

where $k$ is a constant.

**(i)** Using your data, calculate two values of $k$.

first value of $k$ = .....

second value of $k$ = .....

[1]

**(ii)** Explain whether your results support the suggested relationship.

.....

.....

..... [1]

**(g) (i)** Describe four sources of uncertainty or limitations of the procedure for this experiment.

1. .....

.....

2. .....

.....

3. .....

.....

4. .....

.....

[4]

**(ii)** Describe four improvements that could be made to this experiment. You may suggest the use of other apparatus or different procedures.

1. .....

.....

2. .....

.....

3. .....

.....

4. .....

.....

[4]

[Total: 20]

Permission to reproduce items where third-party owned material protected by copyright is included has been sought and cleared where possible. Every reasonable effort has been made by the publisher (UCLES) to trace copyright holders, but if any items requiring clearance have unwittingly been included, the publisher will be pleased to make amends at the earliest possible opportunity.

To avoid the issue of disclosure of answer-related information to candidates, all copyright acknowledgements are reproduced online in the Cambridge International Examinations Copyright Acknowledgements Booklet. This is produced for each series of examinations and is freely available to download at www.cie.org.uk after the live examination series.

Cambridge International Examinations is part of the Cambridge Assessment Group. Cambridge Assessment is the brand name of University of Cambridge Local Examinations Syndicate (UCLES), which is itself a department of the University of Cambridge.